Type 4X Indoor Use Only Enclosure.

NEW – DESIGN PROTECTED

GENERAL SPECIFICATIONS

VALBIA electric actuators are designed for the automation of ball and butterfly valves for the industrial, commercial and OEM markets. As a result of years of intensive R+D, advanced high-tech electrical component design and precise gearing VALBIA electric actuators offer the best in performance and long term reliability.

The range has been manufactured with the following features:

- The actuator housing is made from a V0 self-extinguish class techno-polymer material.
- The kinematics is made by two steel and techno-polymer gear wheels, sustained by hardened steel pinions, mounted on self-lubricating bushings (excluding Mod. VB015), and inserted in a rugged die-cast aluminium structure.
- The direct connection part of the actuators to the valves, is made via a painted die-cast aluminium plate, with a dual drilled ISO 5211 interface.
- The electronic circuit automatically adjusts the motor speed, (depending on the torque variations), to keep the cycle time constant.
- All actuators are provided with an electronic system and torque limiter.
- A standard heater is activated once the actuator is powered, and when the temperature inside the housing drops below 77° F to prevent condensation.
- Two auxillary limit switches are standard.
- Optional 4-20 mA 0-10v modulating boards and battery back-up protection are available.

MODEL		VB015	VB030	VB060	VB110	VB190	VB270	VB350
MAX WORKING TORQUE (in-Lbs)		133	266	530	975	1680	2390	3100
VOLTAGE (V)	LOW VOLTAGE	12V AC/DC	12V DC	12V DC	12V DC	12V DC	12V DC	12V DC
		24V AC/DC	24V AC/DC	24V AC/DC	24V AC/DC	24V AC/DC	24V AC/DC	24V AC/DC
	HIGH VOLTAGE MULTITENSION	100-240V AC	100-240V AC	100-240V AC	100-240V AC	100-240V AC	100-240V AC	100-240V AC
WORKING TIME (sec)		10	8	9	27	27	50	50
TORQUE LIMITER		STD	STD	STD	STD	STD	STD	STD
DUTY RATING		50%	75%	75%	75%	75%	75%	75%
PROTECTION		IP65 ** NEMA 4 X	IP65-67 NEMA 4 X	IP65-67 NEMA 4 X	IP65-67 NEMA 4 X	IP65-67 NEMA 4 X	IP65-67 NEMA 4 X	IP65-67 NEMA 4 X
ROTATION		90°	90°	90°	90°	90°	90°	90°
UPON REQUEST		180°	180° or 270°	180° or 270°	180° or 270°	180° or 270°	180° or 270°	180° or 270°
MANUAL INTERVENTION		STD	STD	STD	STD	STD	STD	STD
POSITION INDICATOR		STD	STD	STD	STD	STD	STD	STD
WORKING TEMPERATURE		-4°F + 131°F	-4°F + 131°F	-4°F + 131°F	-4°F + 131°F	-4°F + 131°F	-4°F + 131°F	-4°F + 131°F
HEATER		STD	STD	STD	STD	STD	STD	STD
ADDITIONAL FREE LIMIT SWITCHES		n°2 STD	n°2 STD	n°2 STD	n°2 STD	n°2 STD	n°2 STD	n°2 STD
DRILLING ISO 5211 PAD		F03 - F05 *	F03 - F05 *	F05 - F07	F07 - F10	F07 - F10	F07 - F10	F07 - F10
SQUARE DRIVE		0.43	0.43	0.55	0.67	0.67	0.87	0.87
SQUARE UPON REQUEST		0.35	0.35-0.55	0.43-0.67	0.55-0.87	0.55-0.87	0.67	0.67
SAFETY BLOCK		NOT AVAILABLE	UPON REQUEST	UPON REQUEST	UPON REQUEST	UPON REQUEST	UPON REQUEST	UPON REQUEST
			NOT AVAILABLE FOR MOD 12V					
POSITIONER (4~20mA or 0~10 VDC)		NOT AVAILABLE	UPON REQUEST	UPON REQUEST	UPON REQUEST	UPON REQUEST	UPON REQUEST	UPON REQUEST
LINEAR POTENTIOMETER (5K Ω 1W)		NOT AVAILABLE	UPON REQUEST	UPON REQUEST	UPON REQUEST	UPON REQUEST	UPON REQUEST	UPON REQUEST
ELECTRICAL CONNECTIONS		PG11	PG11	PG11	PG11	PG11	PG11	PG11
WEIGHT (LBS)		3.09	5.07	7.28	10.80	10.80	13.23	13.23

* upon request F04 only

** UL pending

ELECTRIC ACTUATOR POWER CONSUMPTION

MODEL		VB015		VB030		VB060		VB110		VB190		VB270		VB350	
VERSION H	NOMINAL VOLTAGE	110V AC	230V AC	100-240V AC											
	ABSORBED CURRENT	75mA	25mA	0.3-0.2A		0.6-0.3A									
	ABSORBED POWER	6.6 VA	6 VA	30-48VA		60-72 VA									
VERSION L	NOMINAL VOLTAGE	12V AC/DC	24V AC/DC	12V DC	24V AC/DC	12V DC	24V AC/DC	12V DC	24V AC/DC	12V DC	24V AC/DC	12V DC	24V AC/DC	12V DC	24V AC/DC
	ABSORBED CURRENT	1.2A	0.6A	2.0A	1.0A	3.6A	1.8A	2.0A	1.0A	3.6A	1.8A	3.6A	1.8A	3.6A	1.8A
	ABSORBED POWER	15 VA		24 VA		44 VA		24 VA		44 VA		44 VA		44 VA	
	FREQUENCY	50/60 HZ													

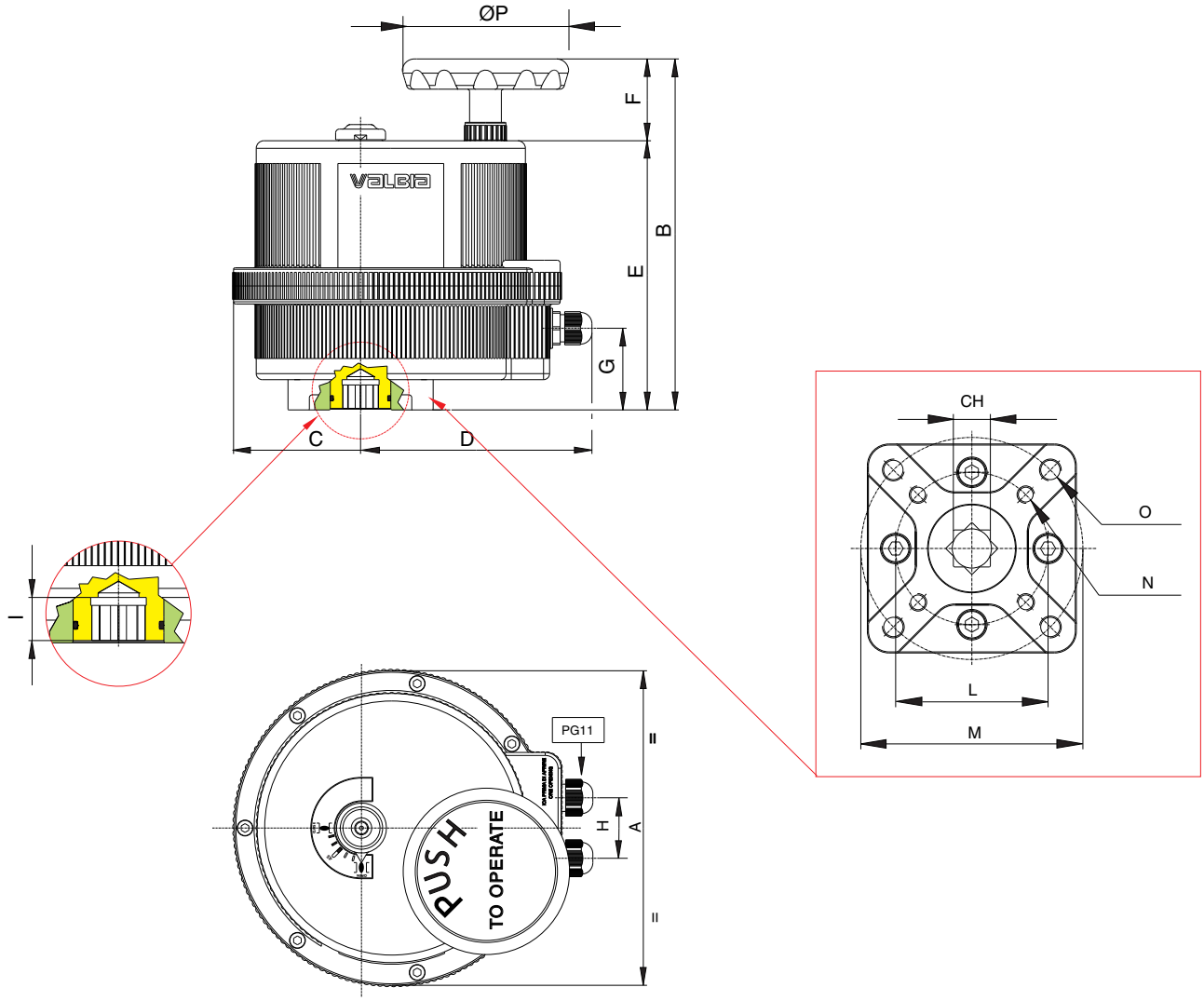

MOD.	DRILLING ISO 5211	CH	A	B	C	D	E	F	G	H	I	L	M	N	O	ØP
VB015	F03 * - F05	0.43	4.84	5.57	1.67	4.74	4.96	0.61	4.06	1.26	0.55	1.42	1.97	10-24 UNC 2BX0.47	1/4-20 UNC 2BX0.55	2.68
VB030	F03 * - F05	0.43	6.18	7.40	2.38	5.12	5.75	1.65	1.30	1.42	0.47	1.42	1.97	10-24 UNC 2BX0.47	1/4-20 UNC 2BX0.55	2.56
VB060	F05 - F07	0.55	7.28	8.46	2.66	5.77	6.81	1.65	2.01	1.42	0.63	1.97	2.76	1/4-20 UNC 2BX0.59	5/16-18 UNC 2BX0.67	2.56
VB110	F07 - F10	0.67	8.31	9.14	3.31	6.02	7.01	2.13	2.13	1.58	0.75	2.76	4.02	5/16-18 UNC 2BX0.79	3/8-16 UNC 2BX0.79	4.33
VB190	F07 - F10	0.67	8.31	9.14	3.31	6.02	7.01	2.13	2.13	1.58	0.75	2.76	4.02	5/16-18 UNC 2BX0.79	3/8-16 UNC 2BX0.79	4.33
VB270	F07 - F10	0.87	8.74	9.19	3.03	6.69	7.17	2.03	2.13	1.58	0.95	2.76	4.02	5/16-18 UNC 2BX0.79	3/8-16 UNC 2BX0.79	4.33
VB350	F07 - F10	0.87	8.74	9.19	3.03	6.69	7.17	2.03	2.13	1.58	0.95	2.76	4.02	5/16-18 UNC 2BX0.79	3/8-16 UNC 2BX0.79	4.33

* Upon request F04 only

ELECTRIC WIRING VB015 12V–24V AC/DC

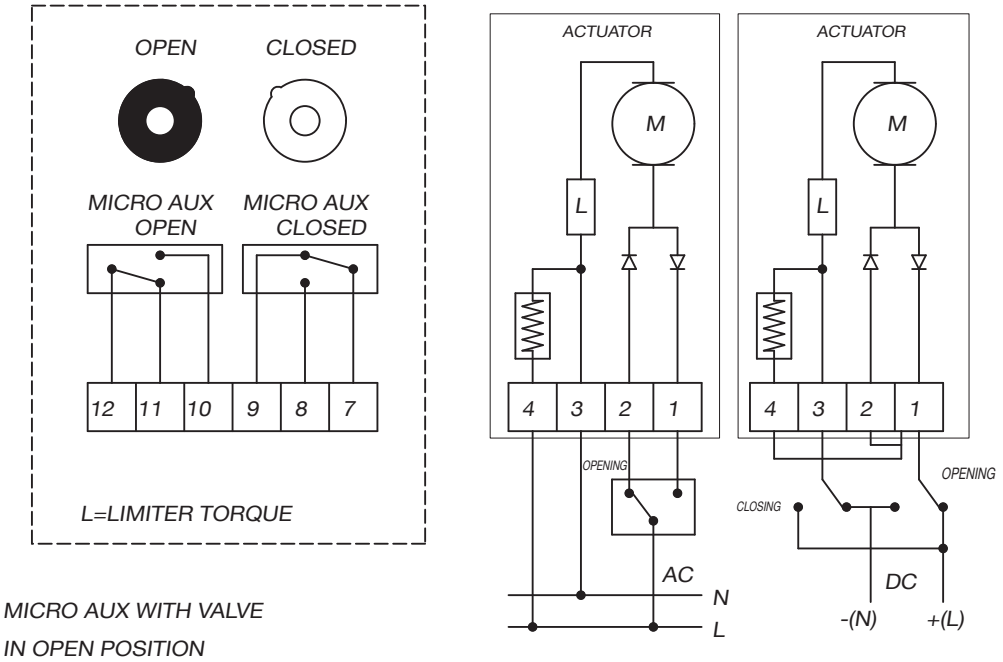

ELECTRIC WIRING VB015 115V–230V AC

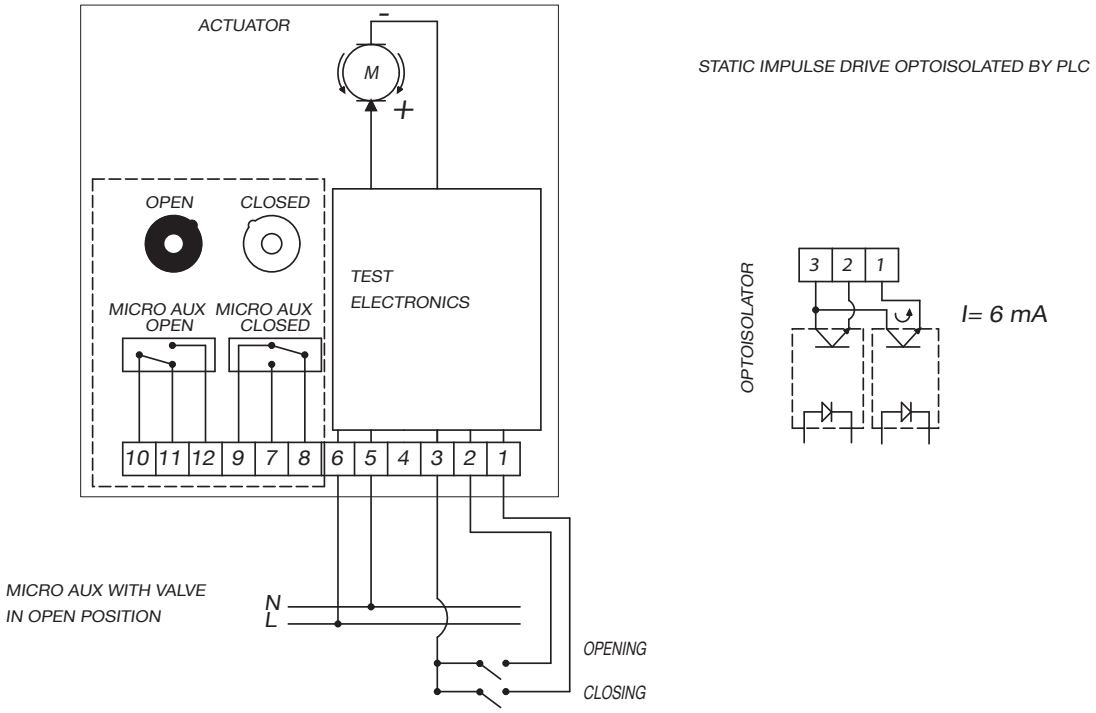

ELECTRIC SPECIFICATION FROM VB30 TO VB350 12V DC, 24V AC/DC. 110-240V AC

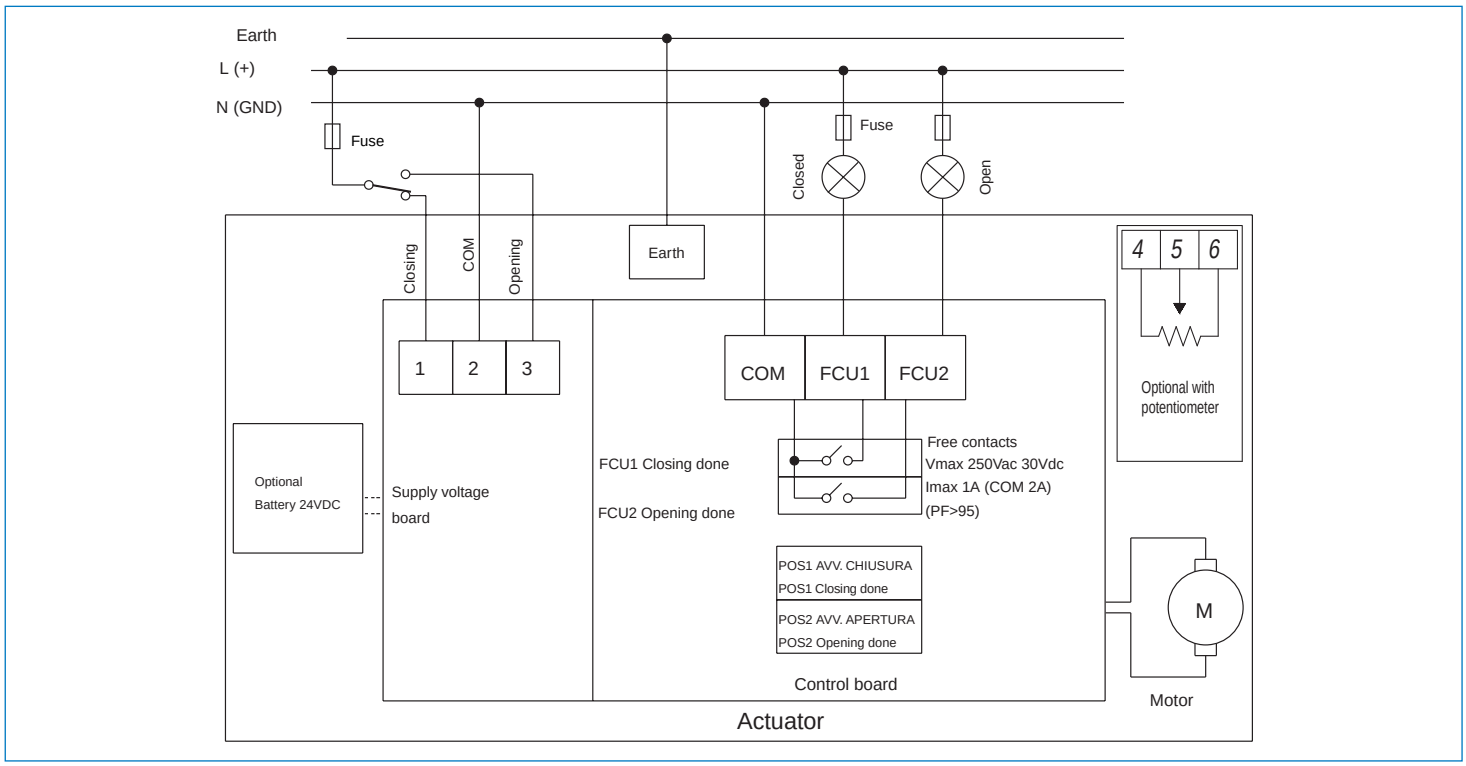
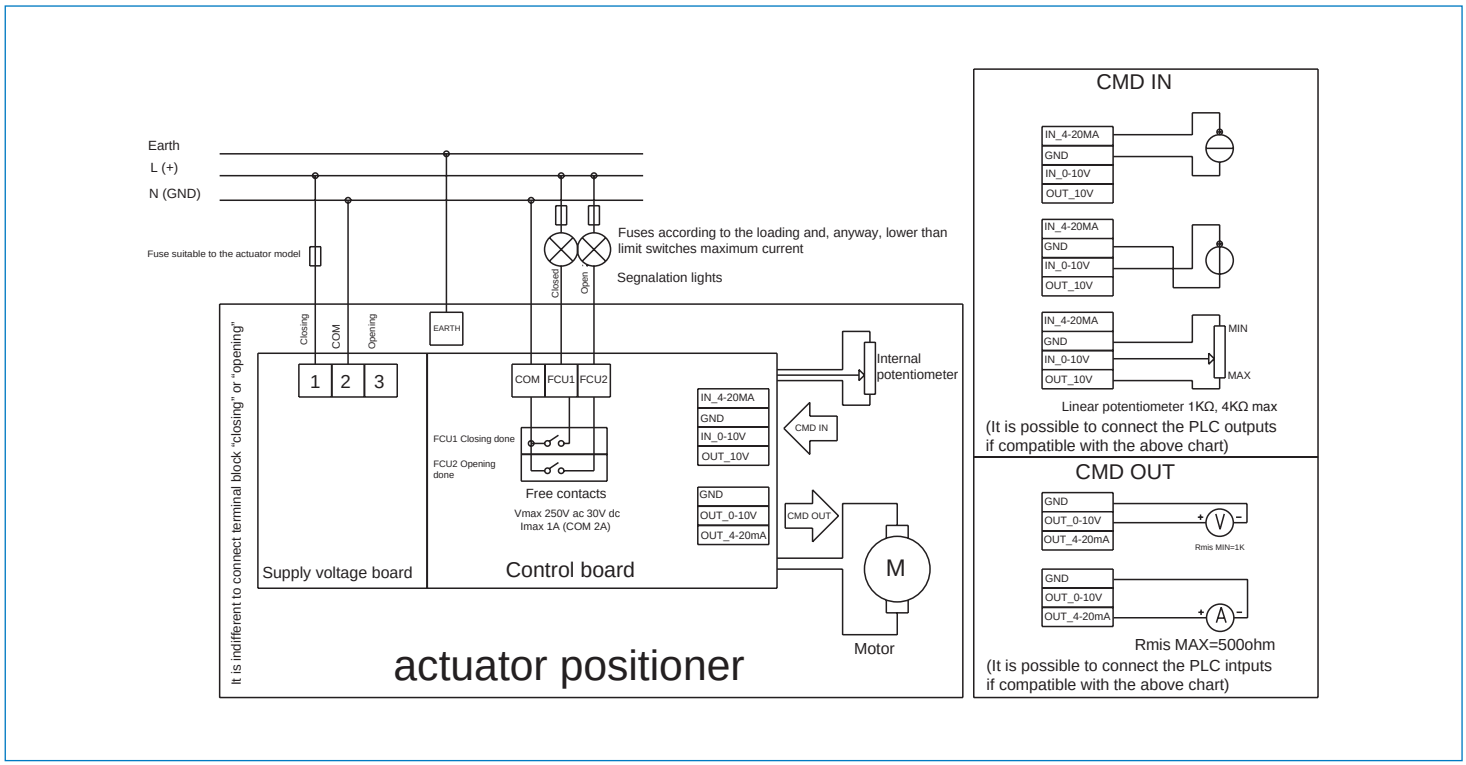
WIRING OF THE POSITIONER FROM VB30 TO VB350 12V DC, 24V AC/DC. 110-240V AC